REVISIONS					
ECO	REV.	DESCRIPTION	DATE	DRAWNBY	APPROVED
2025-41	01	PRELIMINARY RELEASE	2/13/2025	RG	FZ

NOTES:

1. MATERIAL: EPDM, BLACK
2. VOLUME: 1.216 CUBIC INCHES
3. THIS IS A LIMITED DIMENSION DRAWING. MISSING DIMENSIONS ARE MODEL DRIVEN.
4. CRITICAL DIMENSIONS ARE SHOWN IN BUBBLES. THERE ARE NO CRITICAL DIMENSION ON THIS DRAWING.
5. PARTS TO BE ADEQUATLEY PACKED TO PREVENT DAMAGE DURING SHIPPING.
6. FLASH THICKNESS: .002" MAX. FLASH EXTENSION: .005" MAX. MISMATCH AT PARTING LINE: .002" MAX
7. TOOLING DESIGN TO BE SUBMITTED TO AND APPROVED BY ENGINEERING PRIOR TO CONSTRUCTION OF TOOLS.
8. SHARP EDGES AND CORNERS SHOWN TO BE UP TO .005" RADIUS.

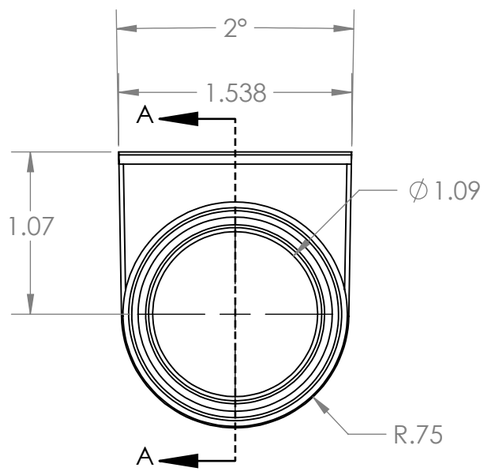

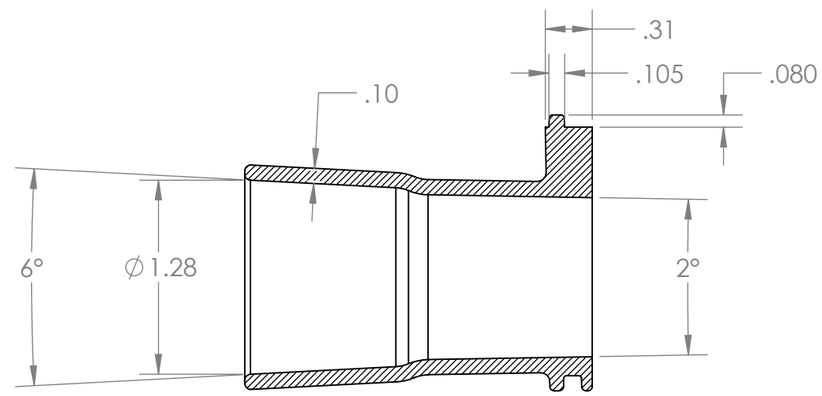

SECTION A-A

(ISOMETRIC VIEW FOR REFERENCE)

DIMENSIONS IN PARENTHESIS ARE FOR REFERENCE ONLY.
UNLESS OTHERWISE SPECIFIED:
DIMENSIONS ARE IN INCHES
TOLERANCES:
FRACTIONAL ± 1/16
ANGULAR: MACH ±.5 BEND ±2
ONE PLACE DECIMAL ± .050
TWO PLACE DECIMAL ± .020
THREE PLACE DECIMAL ± .010

INTERPRET GEOMETRIC TOLERANCING PER:

MATERIAL
EPDM, BLACK

FINISH

DO NOT SCALE DRAWING

	NAME	DATE
DRAWN		
CHECKED		
ENG APPR.		
MFG APPR.		
Q.A.		

COMMENTS:

PROPRIETARY AND CONFIDENTIAL

THE INFORMATION CONTAINED IN THIS DRAWING IS THE SOLE PROPERTY OF PRECISION FIBER. ANY REPRODUCTION IN PART OR AS A WHOLE WITHOUT THE WRITTEN PERMISSION OF PRECISION FIBER IS PROHIBITED.

PRECISION GROUP

TITLE:
GROMMET, XPSNID, FOR 1-1/4" CONDUIT

SIZE	DWG. NO.	REV
B	PF-EXPRESS-CDGR2	01

SCALE: 1:1 | WEIGHT: | SHEET 1 OF 1